EXPORT_CONTROL: HARD_WARE=EAR - EAR99,EXPORT_CONTROL=EAR - EAR99 STATE: Engineering Released Revision: H.8

D

ITEM #	PART NAME	PART NUMBER	QTY.	
-	LAYOUT - MTA25T TRAILER	5-67937H_01	1	
1	AXLE ASSY-TRAILER	SEE BILL OF MATERIAL	1	
2	NAME PLATE	2297T8652	1	
3	PIVOT BUSH MOULDING	A-1225C1537	2	
4	WEAR WASHER	21226663	4	
5	WASHER ECCENTRIC	21226276	2	
6	WASHER SPECIAL	21226275	2	
7	SCREW-CAP (.875-9 UNC X 9)	S-21472-M-2	2	
8	WASHER-HARDENED	1229Q5295	6	G1
9	NUT-LOCK,FIN	1227X1766	6	G2
10	FRAME BRKT-LH	SEE BILL OF MATERIAL	1	
11	FRAME BRKT-RH	SEE BILL OF MATERIAL	1	
12	ABSORBER-SHOCK	SEE BILL OF MATERIAL	2	E1 F2
13	SCREW-CAP (.875-9 UNC X 11)	S-21488-M-2	2	B
14	SCREW-CAP (.875-9 UNC X 10)	S-21480-M-2	2	
15	WASHER-FLAT	1229R5296	8	G3
*16	WASHER-HARDENED	1229Q5295	2	F2 G4
17	SPRING-AIR	A-2258P1576	2	
18	AIR SPRING PEDESTAL	SEE BILL OF MATERIAL	2	
19	NUT-LOCK,FIN	1227B1614	2	
20	NUT-LOCK,FIN	1227M1573	4	
21	PLUG	1250H1308	2	H3
22	VALVE-HEIGHT CONTROL	SEE BILL OF MATERIAL	1	H1
23	WASHER-FLAT	WA-34	2	E2 C
24	NUT-LOCK,FIN.	NL-24-1	2	
25	LINKAGE-HEIGHT CONTROL	A-1245X1220	1	H2

* FOR ROAD FRIENDLY APPLICATION ONLY F3

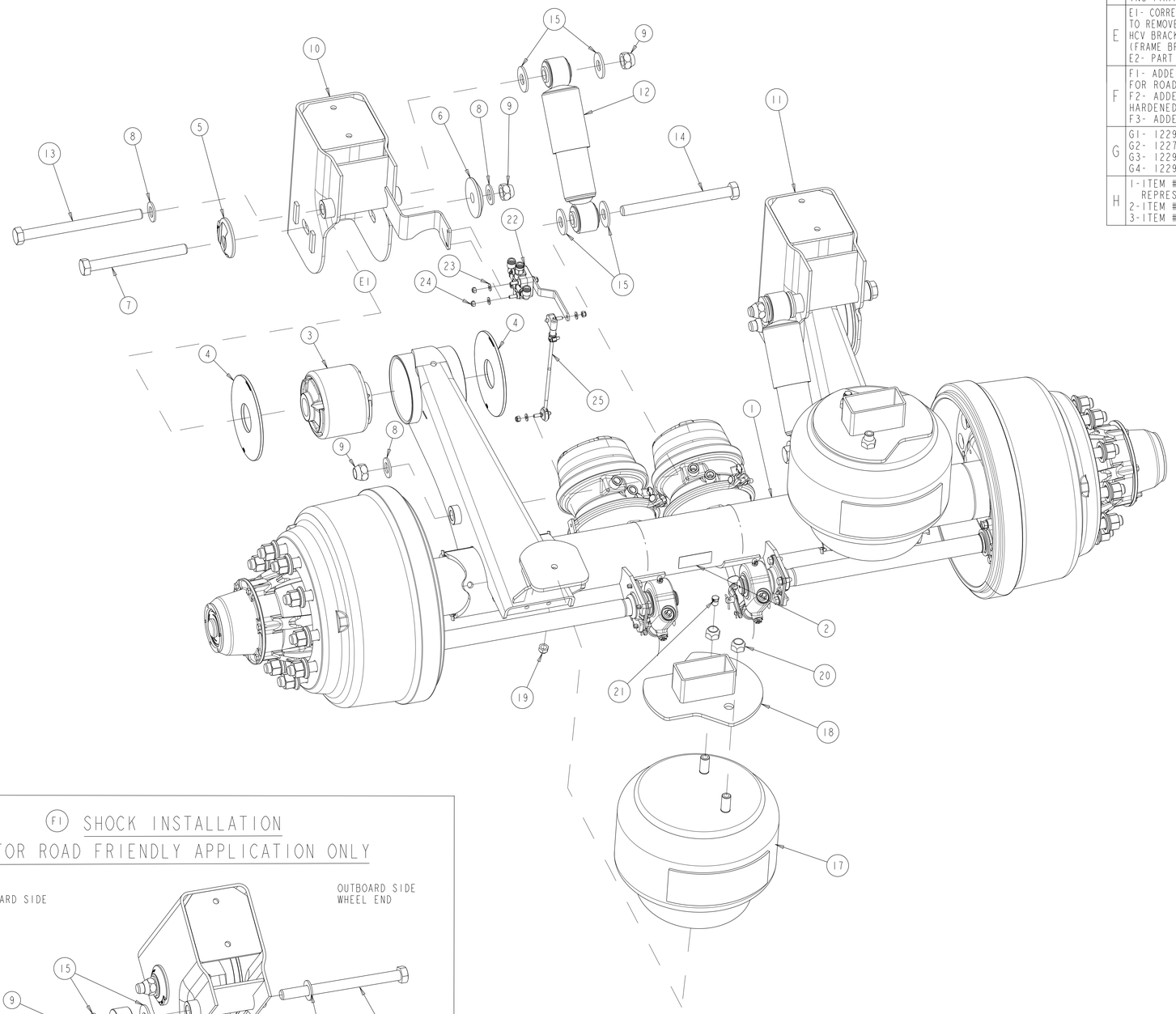

SIM.PARTS	5-67937G_01		
REVISIONS			
A	RELEASED 5-67937H_01 FOR PRODUCTION	109888 09/24/10	CH HN
B	BOLT WAS 21226946	109918 10/05/10	CH SS
C	NUT WAS NL-24-M-1	116764 09/07/11	CH SS
D	CORRECTED TABLE ISSUES (NO PARTS AFFECTED)	120929 02/22/13	CH SS
E	E1- CORRECTED EXPLODED VIEW AND TABLE TO REMOVE ITEM#12 (BRKT,FIN), SINCE HCV BRACKET IS WELDED TO ITEM #10 (FRAME BRKT-LH) E2- PART NUMBER WAS N-24-M-1	122507 21-Nov-13	KHK SKS
F	F1- ADDED SHOCK INSTALLATION VIEW FOR ROAD FRIENDLY APPLICATION F2- ADDED ITEM #16 (WASHER-HARDENED) AND UPDATED TABLE F3- ADDED NOTE	127565 17-Jun-15	VMR LR
G	G1- 1229Q5295 WAS 200259-6 G2- 1227X1766 WAS 1227R1604 G3- 1229R5296 WAS 1229M4979 G4- 1229Q5295 WAS 200259-6	ECN-137447 02-08-17	JMK VL
H	1-ITEM #22 UPDATED RHCV REPRESENTATION 2-ITEM #25 PN WAS 203159-5 3-ITEM #21 QTY WAS 4	ECN-167907 15-JUN-20	VMJ SD

CAD FILES		
	FILE NAME	REV.VER
DRAWING	5-67937H	H.6
ASSEM	5-67937H	H.6

SHOCK INSTALLATION

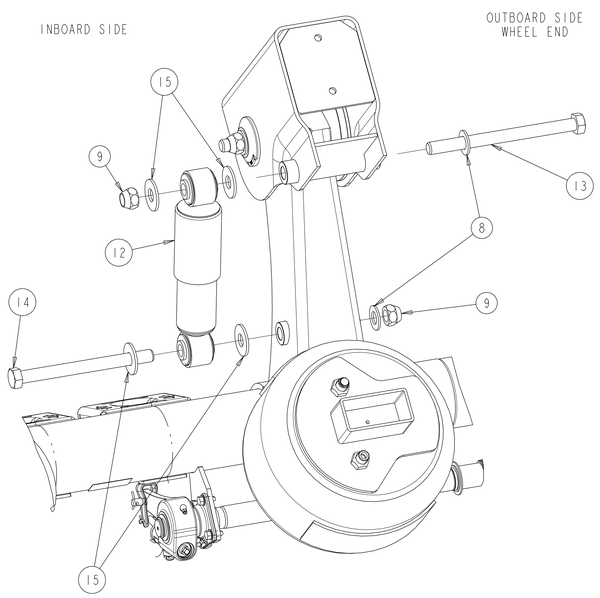

F1 SHOCK INSTALLATION FOR ROAD FRIENDLY APPLICATION ONLY

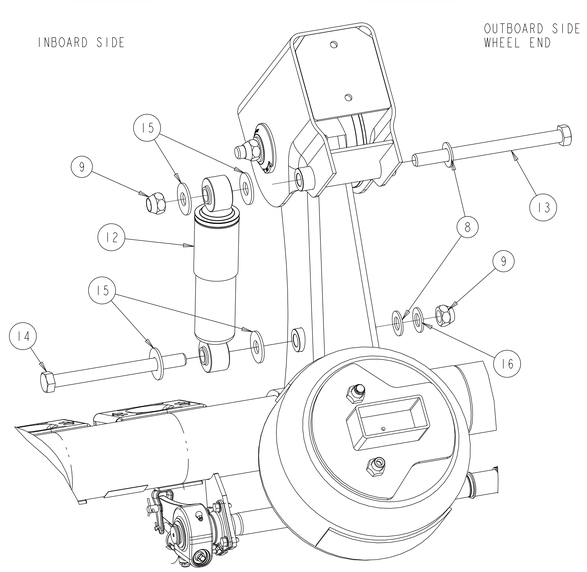

APPLY SPECIFIED MERITOR MARKINGS PER DRAFTING ENGINEERING STANDARDS D-004

THIS PRINT IS LOANED ON A CONFIDENTIAL BASIS SUBJECT TO RETURN UPON DEMAND BY MERITOR AND NOTHING HEREON MAY BE REPRODUCED, USED OR DISCLOSED IN WHOLE OR IN PART WITHOUT THE PRIOR WRITTEN PERMISSION OF MERITOR.

MATERIAL -							109888	PART/DWG NO. 5-67937H_01	EDC 00050
PROCESS -	APPROVED: PROJ.ENG. SAIEG; MATERIAL; SPECIAL	DRAWN BY H.N. 04-Feb-10	CHECKED BY C.H. 04-Feb-10	3RD ANGLE PROJECTION	DRAWING SIZE E		RELEASE	NAME LAYOUT - MTA25T TRAILER	PAGE 1 OF 1
INQUIRY NO.	C.R./T.E. NO. APP. NO. PCCR 117265	ORIGINAL FOR MTA25T	SCALE 1:4	DESIGN CONTROL GROUP W W TRAILER PRODUCTS			MERITOR	INCH	
WEIGHT RGH./FIN. -							PART NO.		

1 2 3 4 IN. 10THS. 10 20 30 40 50 60 70 80 90 100MM

DO NOT CHANGE MANUALLY